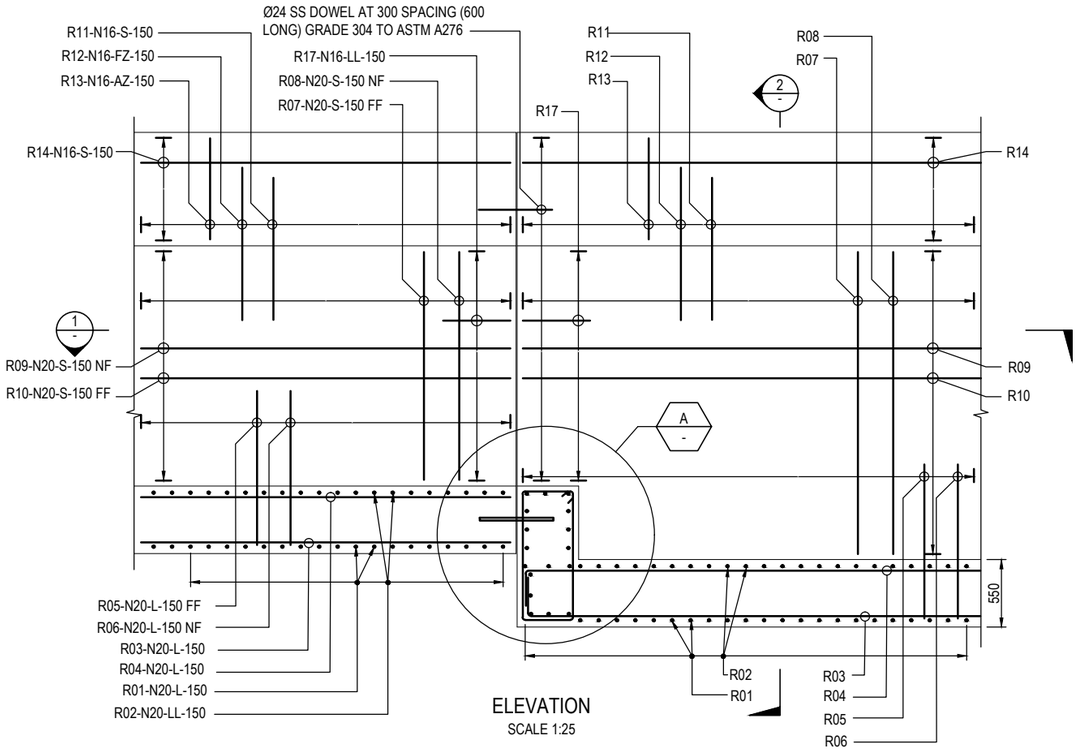

ELEVATION
SCALE 1:25

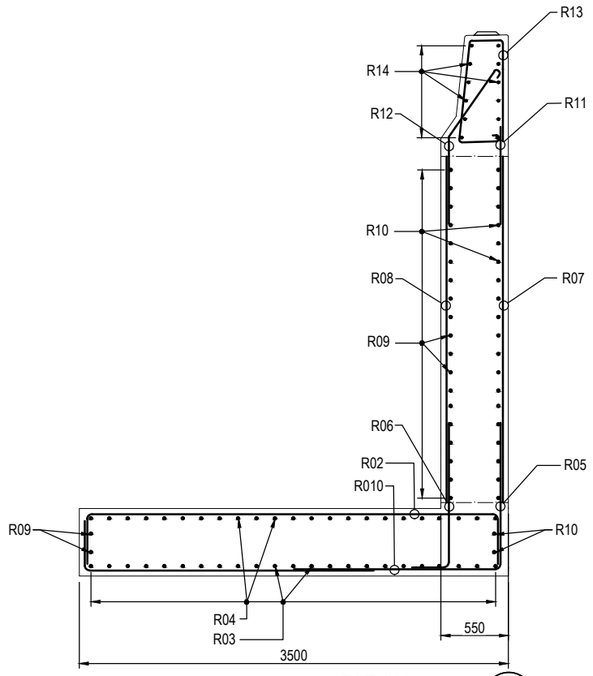

SECTION 2
SCALE 1: 25

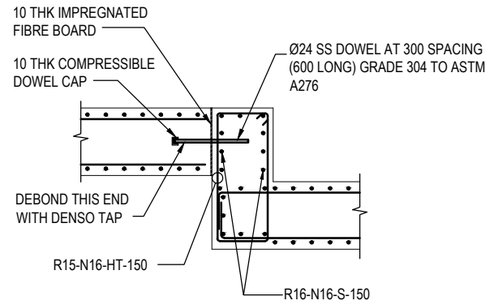

DETAIL A
SCALE 1: 25

TYPICAL STEP FOOTING WITH EXPANSION JOINT (EJS)

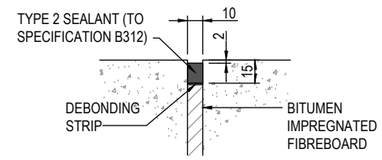

DETAIL B
SCALE 1: 2

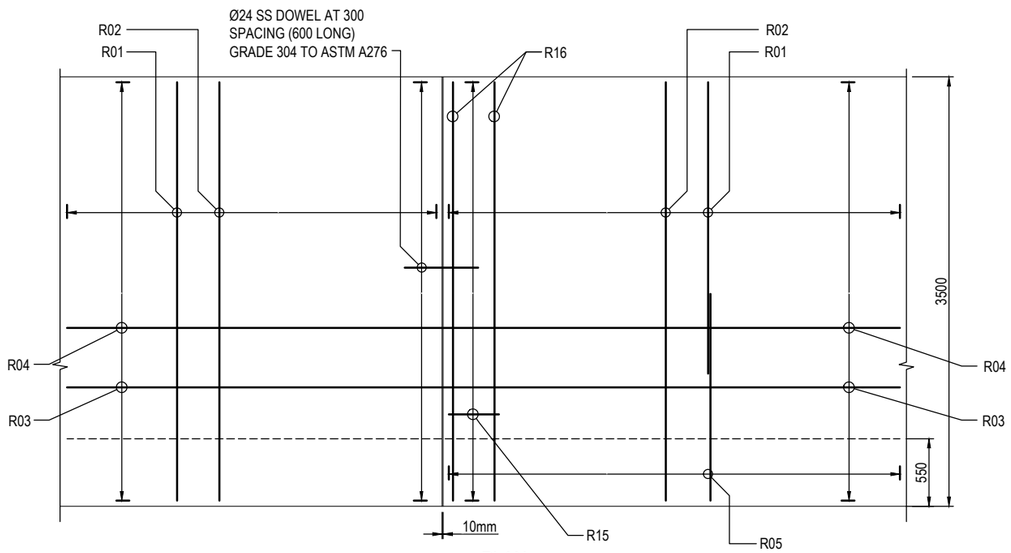

PLAN
SCALE 1:25

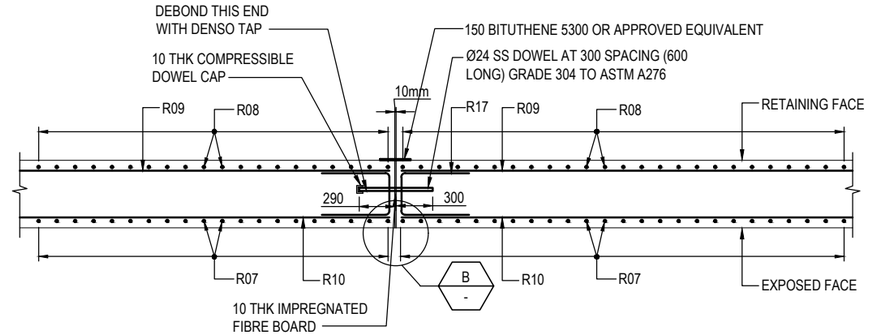

SECTION 1
SCALE 1: 25

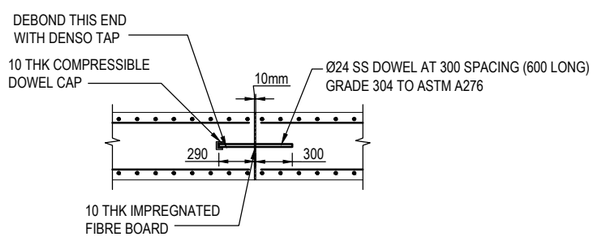

TYPICAL FOOTING WITH EXPANSION JOINT (EJ)

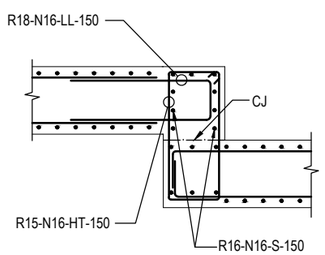

TYPICAL STEP FOOTING WITHOUT EXPANSION JOINT

DR

DRAWING FILE LOCATION / NAME	PLOT DATE	TIME
V:_Vault\Projects\3002750\CAD\DWG\17_SC_Struct\RETAINING_WALLS\3002750-RW-2224.dwg	29 Feb 2024	19:35:14

EXTERNAL REFERENCE FILES: 3002750_SMEC_xl K_RET_SEC_MWTC

REV	DATE	AMENDMENT / REVISION DESCRIPTION	WVR No.	APPROVAL
A	29.02.2024	DRAFT DOCUMENT READINESS (DR) SUBMISSION	0036	T.VN

TITLE	NAME
DRAFTER	M.SURESH
DRAFTING CHECK	V. RAMAMURTHY
DESIGNER	S.MONTGOMERY
DESIGN CHECK	R. HUNTER
PROJECT MANAGER	K. DECANHA
PROJECT DIRECTOR	T. VAN NIEKERK

SCALES AT A1 SIZE DRAWING
SCALE 1:2 — 0.2 0 .02 .04 .06 .08 0.1
SCALE 1:25 — 0.25 0 0.50 1.00 1.25 m

DESIGNER: SMEC — Member of the Surbana Jurong Group — ABN 47 065 475 149 — LEVEL 9, 12 MOORE STREET CANBERRA ACT 2601 AUSTRALIA — SMEC PROJECT No 3002750

CLIENT: ACT Government — Transport Canberra & City Services

PROJECT TITLE: WILLIAM HOVELL DRIVE DUPLICATION

STRUCTURES AND RETAINING WALLS
MW1E
REINFORCEMENT DETAILS

SCALE	PHASE	PROJECT / DRAWING No.	REVISION
AS SHOWN	DETAIL DESIGN	3002750-RW-2224	A

150 mm ON ORIGINAL
A1