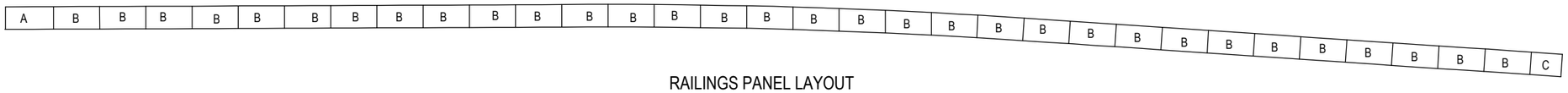

RAILINGS PANEL LAYOUT
SCALE 1:250

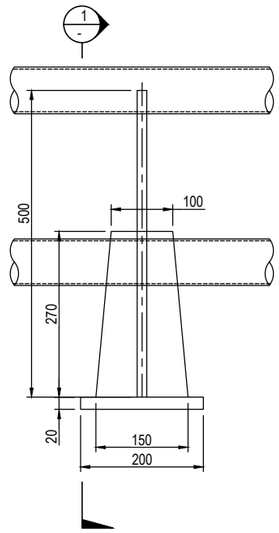

POST - ELEVATION
SCALE 1:5

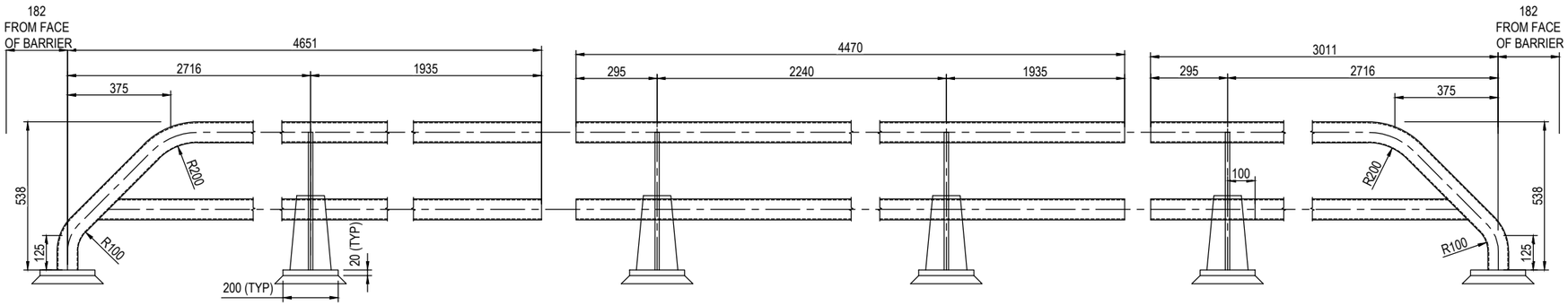

PANEL A - ELEVATION
(NO.1 REQUIRED)
SCALE 1:10

PANEL B - ELEVATION
(NOs.32 REQUIRED)
SCALE 1:10

PANEL C - ELEVATION
(NO.1 REQUIRED)
SCALE 1:10

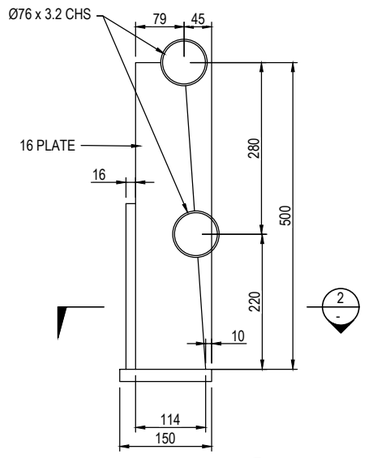

SECTION 1
SCALE 1: 5

PANEL A - PLAN
SCALE 1:10

PANEL B - PLAN
SCALE 1:10

PANEL C - PLAN
SCALE 1:10

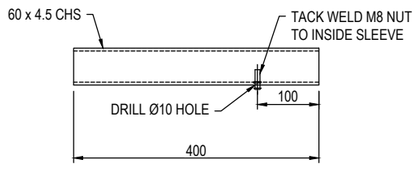

RAIL CONNECTORS - ELEVATION
SCALE 1:5

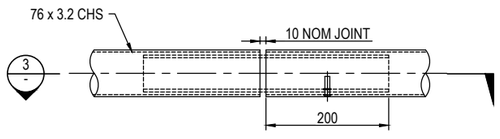

ELEVATION
SCALE 1:5

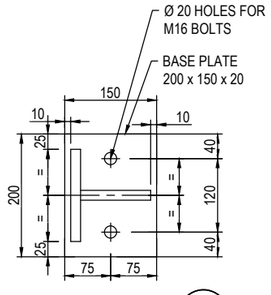

BASE PLATE 2
SCALE 1: 5

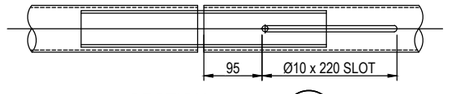

SECTION 3
SCALE 1: 5

DR

DRAWING FILE LOCATION / NAME	PLOT DATE	TIME
V:_Vault\Projects\3002750\CAD\DWG\17_SC_Struct\RETAINING_WALLS\3002750-RW-2231.dwg	29 Feb 2024	19:35:51

EXTERNAL REFERENCE FILES

REV	DATE	AMENDMENT / REVISION DESCRIPTION	WVR No.	APPROVAL
A	29.02.2024	DRAFT DOCUMENT READINESS (DR) SUBMISSION	0036	T.VN

TITLE	NAME
DRAFTER	M.SURESH
DRAFTING CHECK	V. RAMAMURTHY
DESIGNER	S.MONTGOMERY
DESIGN CHECK	R. HUNTER
PROJECT MANAGER	K. DECANHA
PROJECT DIRECTOR	T. VAN NIEKERK

SCALES AT A1 SIZE DRAWING
SCALE 1:5 — 0.05 0 0.10 0.20
SCALE 1:10 — 0.1 0 0.1 0.2 0.3 0.4 0.5
SCALE 1:250 — 2.5 0 5 10

DESIGNER
SMEC
Member of the Surbana Jurong Group
ABN 47 065 475 149
LEVEL 9, 12 MOORE STREET
CANBERRA ACT 2601 AUSTRALIA
SMEC PROJECT No 3002750

CLIENT
ACT Government
Transport Canberra & City Services

PROJECT TITLE
WILLIAM HOVELL DRIVE DUPLICATION

STRUCTURES AND RETAINING WALLS
MW1D AND MW1E
RAILING DETAILS

SCALE	PHASE	PROJECT / DRAWING No.	REVISION
AS SHOWN	DETAIL DESIGN	3002750-RW-2231	A

150 mm ON ORIGINAL
A1
X_3002750_SMEC_a1